Petite Amateur Navy Satellite

Steven R. Bible, N7HPR **Dan Sakoda, KD6DRA**
n7hpr@amsat.org **dsakoda@nps.navy.mil**
Space Systems Academic Group
Naval Postgraduate School
Monterey, CA 93943

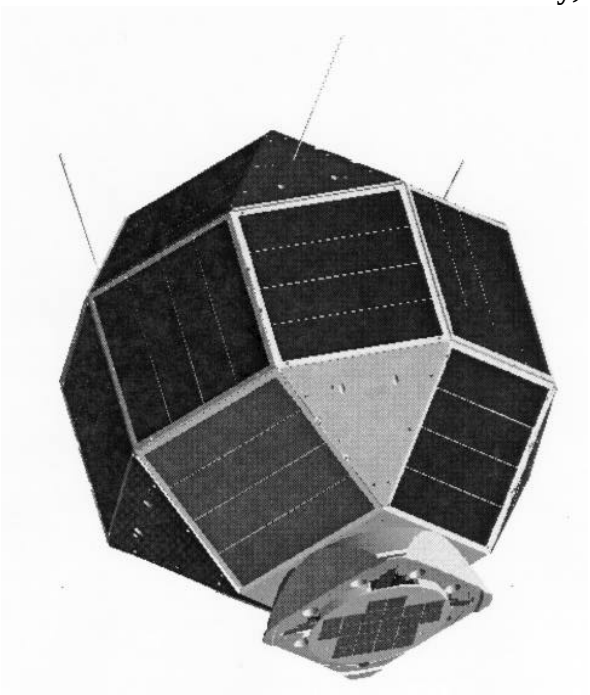

Introduction

The Naval Postgraduate School (NPS) (Monterey, California) is developing a small satellite for digital store-and-forward communication using spread spectrum techniques. NPS is looking toward the amateur radio community in an effort to utilize cost-effective engineering and proven means of radio message relay. This cooperative initiative between NPS and the amateur radio community provides numerous benefits for the education of NPS students. The spacecraft will provide for amateur radio enthusiasts a new space communication mode utilizing spread spectrum modulation for packet radio. It also offers a means of evaluating spread spectrum in the increasingly congested frequency bands.

The Petite Amateur Navy Satellite (PANSAT) will provide a proof-of-concept for store-and-forward communication on a small satellite utilizing spread spectrum modulation techniques. PANSAT will be a tumbling spacecraft with a weight of 150 pounds to be completed in September 1996. The spacecraft will supply direct-sequence, spread-spectrum modulation with an operating center frequency of 436.5 MHz, a bit rate of 9.84 kilobits per second and 4.5 megabytes of message storage. PANSAT will be launched into low-Earth orbit via the Shuttle under the HitchHiker program utilizing a Get Away Special (GAS) canister. Expected launch of PANSAT is September 1997 onboard STS-86, a MIR rendezvous mission. The launch will provide an orbit altitude of about 390 km and inclination of 51.6^{o}. The spacecraft has a 2 year mission life requirement.

Educational Opportunities

PANSAT offers students an opportunity to gain practical education in Space Systems Engineering and Operations by way of Master's degree theses, class projects, and directed study courses. PANSAT development combines the goals of education and technology application for the benefit of National Defense. The topics of graduate work are varied and yield a system-wide scope with exposure to real issues of design, development, integration, testing, and scheduling. Topics include mission operations, astrodynamics, mechanical and electronic subsystem design, system integration, software development, and protoflight testing. Once in orbit, PANSAT will provide both a means of evaluating the communication payload as well as a space-based instructional laboratory. As of August 1995, approximately fifty PANSAT related theses have been completed.

Spacecraft Configuration and Design

PANSAT has a robust structural design with high margins of safety and is adaptable to a number of launch vehicles. The satellite is approximately 19 inches in diameter and has no attitude control or propulsion. Eighteen square and eight triangular aluminum panels make up the outer surface of the satellite. Seventeen of the square panels are equipped with silicon solar panels and one gallium-arsenide panel is attached at the bottom of the launch vehicle interface (LVI). Four dipole antennas are attached in a tangential turnstile configuration to the triangular plates. The spacecraft interior structure is composed of two equipment plates and a cylindrical support. Figure 1 shows an expanded view of PANSAT.

The structure design consists of an aluminum housing and equipment plates in an approximately spherical configuration. The main load-bearing structure is a thin-shell cylinder supporting the lower equipment plate and attached at the baseplate where the interface occurs. PANSAT will fly as a secondary Shuttle payload under the HitchHiker program. A Get Away Special (GAS) canister and a NASA standard Ejection Mechanism for GAS payloads will be used to deploy the spacecraft.

The three main spacecraft subsystems are: communication (COMM), electrical power (EPS), and digital control (DCS). Figure 2 shows a system block diagram of PANSAT subsystems.

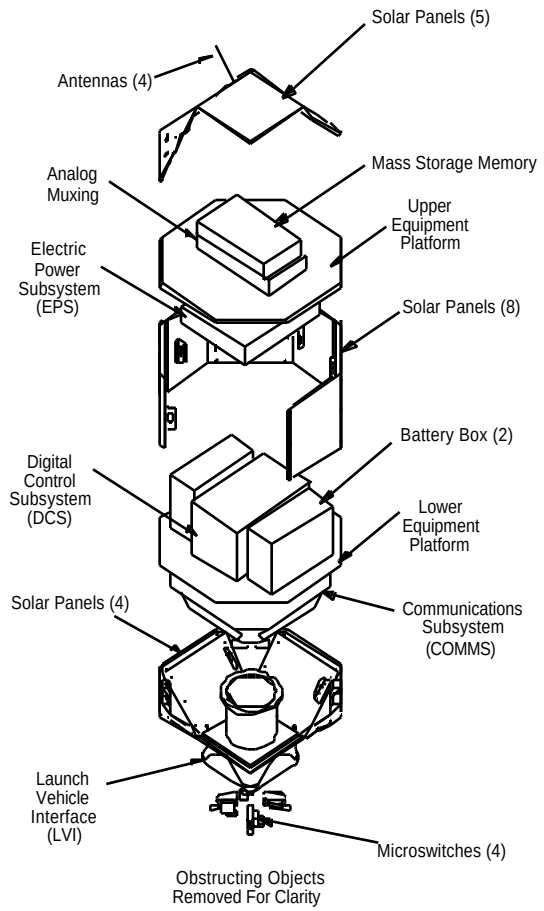

Figure 1. PANSAT Expanded View

Spread-Spectrum Communication Payload

The communication (COMM) payload will be simplex, or half-duplex, having a single channel for both up-link and down-link. The planned data rate is 9.84 kilobits per second. The spacecraft will operate at a 436.5 MHz center frequency in the amateur radio 70 cm band.

The pseudo-noise (PN) code sequence, in accordance with present rules and regulations, is implemented using a seven bit shift register with taps at 7 and 1. The PN code is mixed with data stream at a rate of 1 sequence length per bit of information, or 127 chips per bit. The spread signal is then modulated using binary-phase-shift-keying (BPSK) and up-converted to the transmitted carrier with 2.5 MHz of bandwidth. The spacecraft transmitter is capable of varying the output power to allow only the minimum required energy for successful reception.

The spread spectrum receiver provides signal detection, tracking, and demodulation for recovery of the digital bit stream. The communication payload passes the data stream to a serial communication controller (SCC) for de-packetizing and error-checking of the CRC (cyclical redundancy check). The recovered data is then delivered to the

spacecraft microprocessor. Both the modem and processor boards are located in the DCS System Controller (see Figure 2). The receiver is capable of receiving a carrier of at least -120 dBm signal strength. The development of the COMM subsystem is currently in the prototype phase.

Link analysis shows the required transmit effective isotropic radiated power (EIRP) of the satellite to be 0.756 W and the ground station 2.65 W. The analysis assumed a Shuttle orbit altitude of 390 km and probability-of-bit-error of 10^{-5} or less. The satellite transmitter is designed to provide at least 2.0 W, and be able to step down to the minimal power required for acceptable probability-of-error, and should compensate considerably for a Rayleigh or Rician fading channel. The antenna on the spacecraft is an omni-directional tangential turnstile antenna with 4 dipole whips and 0 dB gain. The ground station antenna is assumed to be a standard commercial antenna with a gain of 15 dB.

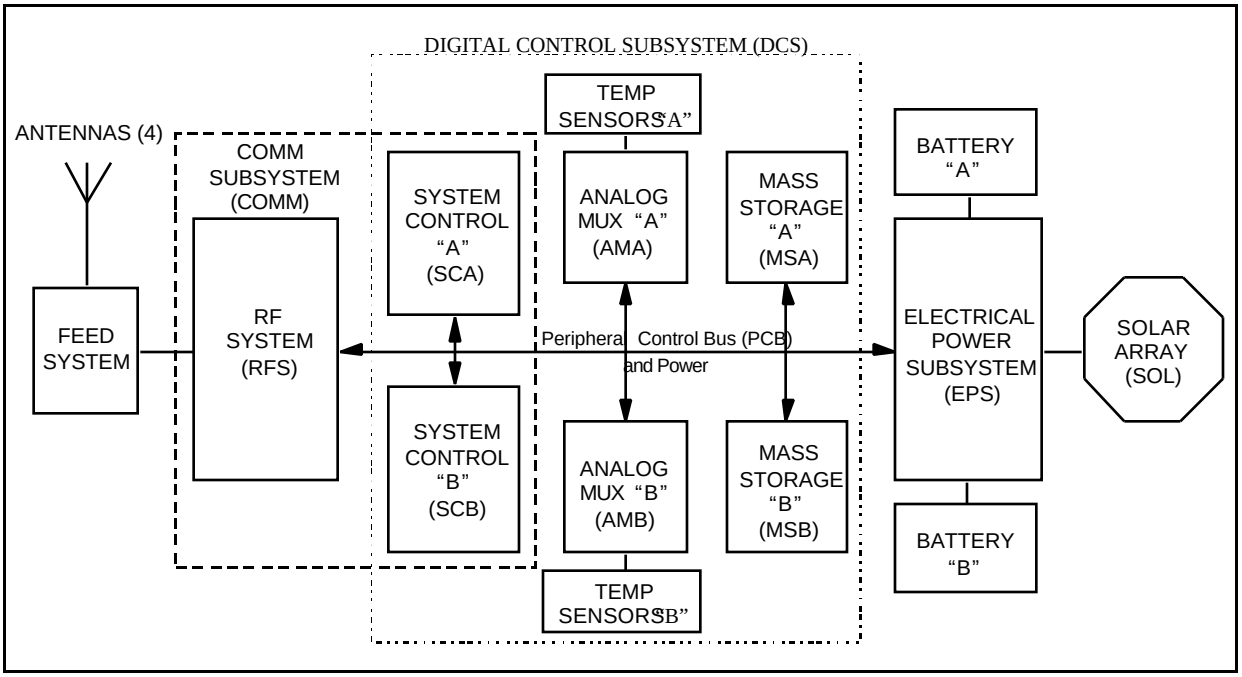

Figure 2. PANSAT System Block Diagram

The COMM payload consists of two direct sequence spread spectrum transmitters and receivers. Each unit is capable of switching from spread spectrum modulation to narrow-band binary-phase-shift keying (BPSK) transmission/reception. This allows for contingency operation as well as providing the capability of down-linking a narrow band telemetry beacon. The latter is of interest to those users lacking the capability of spread spectrum, or those in the early stage of setting up their ground station equipment. The COMM payload is designed using commercial off the shelf (COTS) components. Radiation-hardened components are used only in critical subsystem areas.

Electrical Power Subsystem

The electrical power subsystem (EPS) consists of solar cells for primary power, nickel-cadmium batteries for eclipse power, and power regulation/conditioning circuitry. The EPS relies on the main spacecraft processor for activating relays and for determining charge levels and charge cycles. Power is provided through an unregulated 12V $\pm$3V bus and regulated at each subsystem module. A shunt regulator is not being implemented in the design since the solar array voltage will never exceed the maximum input voltage of any subsystem DC-DC converter.

Both nickel-cadmium batteries will be depleted to a set level prior to launch to ensure the payload is inert while in the Shuttle. The EPS provides battery charging while the satellite operates in the sunlight. This requires a low-power (standby) mode of operation during eclipse in the very early stage of the mission until a battery reaches sufficient charge.

Silicon cells were selected for their low cost and adequate power efficiency. A minimum efficiency of 14.5 percent at AM0 (air mass zero) and 28° C was deemed adequate based on initial power budget estimates. 17 silicon cell panels cover the spacecraft providing an average area of approximately 1209 cm^2. Each panel consists of 32 cells with dimensions 1.92 cm x 4.00 cm connected in series. The panels were fabricated using the K6700 silicon cell with back-surface field and back-surface reflector (BSFR). An additional Gallium-Arsenide (GaAs) solar cell panel was added to allow power conversion in the case where the launch vehicle interface (LVI) is pointed at the sun. This GaAs panel takes advantage of Shuttle payload user volume below the LVI.

Digital Control Subsystem

The primary functions of the digital control subsystem (DCS) are to provide control of the EPS, control and operation of the COMM payload, gather and store telemetry data, and perform memory management and control for message handling. The DCS consists of fully redundant control boards, each run by a M80C186XL microprocessor. The design of the DCS has gone through a number of iterations by students at NPS in order to fulfill the functional requirements of PANSAT. The 80C186 microprocessor was selected for its proven architecture, radiation tolerance, low power consumption, availability of development tools, and its capability of supporting a multi-tasking environment.

The memory utilized in the DCS is divided into read-only memory (ROM) which stores the bootable operating system, system error-detection-and-correction (EDAC) random-access memory (RAM) where the boot-up ROM program is loaded, and mass storage memory, or user memory, which stores messages and telemetry data. The DCS will have 64 kilobytes of system ROM, 512 kilobytes of EDAC system RAM, and 4.5 megabytes of user memory.

Static RAM used for messages and telemetry requires a constant supply of power. Thus, all information will be lost in the event of loss of power. A reliable, non-volatile memory system would be ideal, provided it is easily implemented and yields the same functionality as those components already identified. Flash memory promises the advantages of non-volatility, high cycle life (100,000 block erase cycles), access time comparable to dynamic RAM (DRAM), and high density. Half of one megabyte of Flash memory will be available in the mass storage system, but cannot be relied on for system-critical data. The Flash memory will be flown as an experiment.

The DCS is capable of updates of the operating system since the bootable kernel is transferred to RAM. This allows the up-link of application software, or tasks, and takes advantage of the hierarchical level of the operating system. The DCS will boot from a portion of ROM, located in high-memory (64 kilobytes), where a fully tested kernel, boot loader, and primitive tasks are stored. The DCS will load the boot-up kernel from ROM into the low memory of the 1 megabyte of addressable memory of the 80C186. The DCS then will wait for a command from the ground to either load the remaining full operating system from ROM or up-load from the ground.

The operating system is multi-tasking, supporting concurrent tasks. Tasks communicate with other tasks via the operating system providing a powerfully flexible means of operation, software design, upgrade, and implementation. The AX.25 protocol is one such application task. Another task may be the request for telemetry data from the other spacecraft subsystems, or the implementation of mail services. Additional user services may be implemented as the spacecraft is utilized. In the event of a reset, however, the services of later versions of software will need to be reloaded.

Ground Operations

The command ground operations for PANSAT will occur at NPS utilizing common amateur radio equipment and PANSAT-specific components for spread spectrum modulation. The NPS ground station will have full command capability and telemetry data display software. Operational integrity may also differ from ordinary ground stations such as uninterruptible power and data backup facilities. The basic configuration includes a PC with application software to perform a bulletin-board-like interface, the terminal node controller (TNC) which maintains the link management (implementing the AX.25 protocol), the transmitter, receiver, and antenna system. The antenna system includes azimuth and elevation rotors for ground tracking. Ground tracking is done by using the predicted spacecraft ephemeris and is, therefore, open-loop. The ground station is also required to perform Doppler compensation for both up-link and down-link transmissions.

The NPS ground station will be required to connect with the satellite within a minimum three-day period. The low-Earth orbit permits a minimum twice-daily visitation with NPS. NPS will down-link telemetry data that includes sensor data and operational status information including system administrative data. If three days have passed without NPS connection, the spacecraft will shutdown all general users until connection with NPS is made. Telemetry data will be maintained during this time, if possible. Other contingencies may follow such an event if a hardware or software failure occurs. Telemetry data from sensors will be stored to provide a history of spacecraft performance. The most recent cycle of sensor data will be available for down-link. Other information in the telemetry package includes the spacecraft time, software statistics, operating system version, operations log including command execution and errors, and the mail box log.

Potential Applications

The potential applications of digital communication via a spacecraft utilizing store-and-forward spread spectrum are numerous. Evaluation of the payload in its current configuration will help determine applicability for an operational system. Key points of the PANSAT design are its simplicity and low-cost. However, PANSAT does provide a sophisticated solution to message relay on a small space platform with the added advantages of a spread spectrum system. A number of examples of potential applications have been suggested for civil as well as military purposes. In its current configuration, PANSAT will provide a necessary means of communication to the amateur radio community to support public service communications, such as in times of natural disaster.

Summary

The design for the Petite Amateur Navy Satellite (PANSAT) continues with the aim of providing a small low-cost, spread spectrum communication satellite for message relay. The PANSAT project is already successfully meeting its objective of providing meaningful educational experience for students at NPS. The specialized analytical skills nurtured through graduate thesis research are coupled with real-world issues of system design, integration, testing, and operations. Once in orbit, PANSAT will provide yet another means of instruction for space-based communication experiments.

Further information on the development of PANSAT can be followed from the Space Systems Academic Group World Wide Web server at URL http://www.sp.nps.navy.mil